ECON® Ball valve Type: 7642FS Stainless steel Fire safe Butt weld B16.25 S40 Class 600

Characteristics

Type: 7642FS
Norm: ASME
Construction type: 2-way
Housing construction: 3-part
Housing material: Stainless steel
Material quality: ASTM A351 CF8M
Connection: Butt weld
Standard welding connection: B16.25 S40
Top flange standard: ISO 5211 Direct Mount
With locking device: No
Material ball: ASTM A351 CF8M
Seat material: TF 4103
Spindle material: ASTM A276 316 Grade S
Primary spindle seal material: RPTFE
Secondary spindle seal material: FPM (FKM)
Tertiary spindle seal material: Graphite
Body seal: Graphite
Material connection piece: ASTM A351 CF8M
Minimum medium temperature (continuous): -40 °C
Maximum medium temperature (continuous): 220 °C
Fire safe: Yes
Pressure relief:

Application

- Industrial and maritime applications.
- Liquid and gaseous media.
- Recommended in: Chemical

Technical Information

- Connection according to ASME B16.25 S40.
- Floating ball.
- Pressure class: Class 600.
- With direct-mount top flange according to ISO 5211.
- Closed neck design with leak detection opening.
- Equipped with a robust lever.
- Average temperature for a tap with standard TF 4103 seats: -40°C/+220°C. Up to a maximum of 250° C for taps with TF 4215 seats.

Construction

- Three-part housing construction.
- Wall thickness according to EN 12516-1 and ASME B16.34.
- Full or reduced bore.
- Design with antistatic equipment between ball and housing.

Approval

- Fire-safe according to ISO 10497 (third edition) and API 607 (seventh edition).
- Type approval from Lloyd's Register.
- Safety integrity level (SIL) 2.

Options

- Design with worm gearbox, pneumatic, electric or hydraulic drives.
- Position feedback for manual and automatic valves.
- Available with different seat materials such as TF 4215, TFM 1600 and PEEK.
- Fire-safe design available.
- Stainless steel extended spindle for insulation or for cold applications (up to -50°C).
- With connection for earthing.
- With 30°, 60° or 90° V-shaped ball bore for modulating applications.
- Connections with BSPP thread according to ISO 228-1, NPT thread according to ASME B1.20.1, socket weld according to ASME B16.11 or EN 12760, and butt weld according to EN 12627 or ISO 1127 S1 or SMS 3008 (EN 10357 series D) or DIN 11850 series 1 and 2 (EN 10357 series B and A).

PR15792780352437 13_EN_05.05.2024

ERIKS BV | Tel: +31 88 855 80 03 | E-mail: vk@eriks.nl

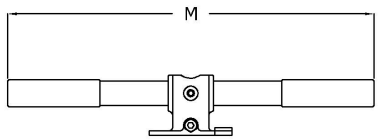

DN2.1/2"

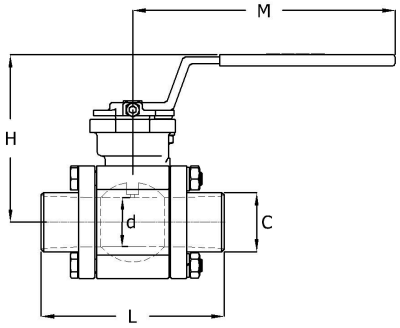

Size table:

DN	Full bore	d	L	H	M	C	Weight
		mm	mm	mm	mm	mm	kg
1/4" (8)	Yes	15	71	83	140	13.7	0.9
3/8" (10)	Yes	15	71	83	140	17.1	0.9
1/2" (15)	Yes	15	72	83	140	21.3	1
3/4" (20)	No	15	72	83	140	26.7	1
3/4" (20)	Yes	20	97	88	140	26.7	1.5
1" (25)	No	20	97	88	140	33.4	1.5
1" (25)	Yes	25	109	97	190	33.4	2
1.1/4" (32)	No	25	109	97	190	42.2	2
1.1/4" (32)	Yes	31.8	118	103	190	42.2	3
1.1/2" (40)	No	31.8	118	103	190	48.3	3
1.1/2" (40)	Yes	38	129	148	290	48.3	4.5
2" (50)	No	38	129	148	290	60.3	4.5
2" (50)	Yes	50	145	157	209	60.3	6.5
2.1/2" (65)	No	50	145	157	290	75	6.5

Pressure and temperature range									
Seat material + DN full bore	-40	50	100	150	175	200	250	300	[°C]
TF4103 & TFM1600 1/4" - 1"	99.3	96.2	72	48	25	0	-	-	[bar]
TF4215 1/4" - 1"	99.3	96.2	84.4	65	45	23	0	-	[bar]
PEEK 1/4" - 1"	99.3	96.2	84.4	77	58	37	13	0	[bar]
TF4103 & TFM1600 1.1/4 " - 1.1/2"	80	80	60	40	20	0	-	-	[bar]
TF4215 1.1/4" - 1.1/2"	80	80	80	61	42	21	0	-	[bar]
PEEK 1.1/4" - 1.1/2"	80	80	80	77	57	36	13	0	[bar]
TF4103 & TFM1600 2"	76	76	56	38	20	0	-	-	[bar]
TF4215 2"	76	76	76	58	39	20	0	-	[bar]
PEEK 2"	76	76	76	76	56	35	12	0	[bar]

Nominal inner diameter	External tube diameter of connection	Wall thickness, connection	Pressure rating	Face to Face norm	Manual operation	Mounting flange	Mounting flange 2	Bore	Maximum operating pressure	Article
	mm	mm							bar	
1/4" (8)	13.7	2.25	Class 600	Manufacturer standard	Handle	F03	F04	Full bore	99	13708522
3/8" (10)	17.1	2.3	Class 600	Manufacturer standard	Handle	F03	F04	Full bore	99	13708523
1/2" (15)	21.3	2.75	Class 600	Manufacturer standard	Handle	F03	F04	Full bore	99	13559694
3/4" (20)	26.7	2.85	Class 600	Manufacturer standard	Handle	F03	F04	Reduced bore	99	14256530

PR15792780352437 13_EN_05.05.2024

ERIKS BV | Tel: +31 88 855 80 03 | E-mail: vk@eriks.nl

Nominal inner diameter	External tube diameter of connection	Wall thickness, connection	Pressure rating	Face to Face norm	Manual operation	Mounting flange	Mounting flange 2	Bore	Maximum operating pressure	Article
	mm	mm							bar	
3/4" (20)	26.7	2.85	Class 600	Manufacturer standard	Handle	F03	F04	Full bore	99	13559695
1" (25)	33.4	3.4	Class 600	Manufacturer standard	Handle	F03	F04	Reduced bore	99	14256531
1" (25)	33.4	3.4	Class 600	Manufacturer standard	Handle	F04	F05	Full bore	99	13559696
1.1/4" (32)	42.2	3.55	Class 600	Manufacturer standard	Handle	F04	F05	Reduced bore	99	14256532
1.1/4" (32)	42.2	3.55	Class 600	Manufacturer standard	Handle	F04	F05	Full bore	80	13559697
1.1/2" (40)	48.3	3.7	Class 600	Manufacturer standard	Handle	F04	F05	Reduced bore	80	14256533
1.1/2" (40)	48.3	3.7	Class 600	Manufacturer standard	Handle	F07		Full bore	80	13559698
2" (50)	60.3	3.9	Class 600	Manufacturer standard	Handle	F07		Reduced bore	80	14256534
2" (50)	60.3	3.9	Class 600	Manufacturer standard	Handle	F07		Full bore	76	13559699
2.1/2" (65)	75	6.25	Class 600	Manufacturer standard	Handle	F07		Reduced bore	76	14256535

PR15792780352437 13_EN_05.05.2024

ERIKS BV | Tel: +31 88 855 80 03 | E-mail: vk@eriks.nl