ECON® Ball valve Type: 7422FS Steel Fire safe Internal thread (BSPP) Class 600

Characteristics

Type: 7422FS
Norm: ASME
Construction type: 2-way
Housing construction: 3-part
Housing material: Steel
Material quality: ASTM A216 WCB
Surface protection: Chemical blackened
Connection: Internal thread (BSPP)
Top flange standard: ISO 5211 Direct Mount
Material ball: ASTM A351 CF8M
Seat material: TF 4103
Spindle material: ASTM A276 316 Grade S
Primary spindle seal material: RPTFE
Secondary spindle seal material: FPM (FKM)
Tertiary spindle seal material: Graphite
Body seal: Graphite
Material connection piece: ASTM A216 WCB
Minimum medium temperature (continuous): -29 °C
Maximum medium temperature (continuous): 220 °C
Fire safe: Yes
Pressure relief:

Application

- Industrial and maritime applications.
- Liquid and gaseous media.
- Recommended in: Chemical

Technical Information

- Connection according to ISO 228-1 BSPP.
- Floating ball.
- Pressure class: Class 600.
- With direct-mount top flange according to ISO 5211.
- Closed neck design with leak detection opening.
- Equipped with a robust lever.
- Average temperature for a tap with standard TF 4103 seats: -29°C/+220°C. Up to a maximum of 250° C for taps with TF 4215 seats.

Construction

- Three-part housing construction.
- Wall thickness according to EN 12516-1 and ASME B16.34.
- Full or reduced bore.
- Design with antistatic equipment between ball and housing.

Approval

- Fire-safe according to ISO 10497 (third edition) and API 607 (seventh edition).
- Type approval from Lloyd's Register.
- Safety integrity level (SIL) 2.

Options

- Design with worm gearbox, pneumatic, electric or hydraulic drives.
- Position feedback for manual and automatic valves.
- Available with different seat materials such as TF 4215, TFM 1600 and PEEK.
- Fire-safe design available.
- Stainless steel extended spindle for insulation.
- With connection for earthing.
- With 30°, 60° or 90° V-shaped ball bore for modulating applications.
- Connections with NPT thread according to ASME B1.20.1, socket weld according to ASME B16.11 or EN 12760, and butt weld according to ASME B16.25 S40 or EN 12627.

PR1579278035243668_EN_23.04.2024

ERIKS BV | Tel: +31 88 855 80 03 | E-mail: vk@eriks.nl

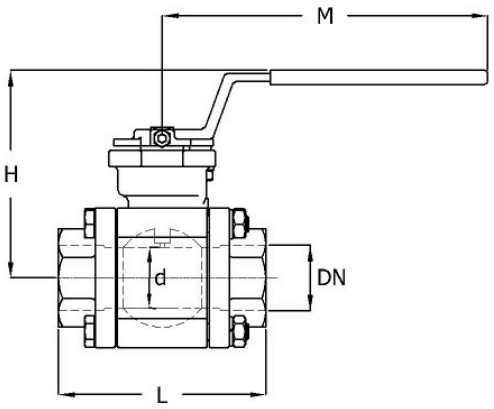

Size table:

DN	Full bore	d	L	H	M	Weight
		mm	mm	mm	mm	kg
1/4" (8)	Yes	15	71	83	140	0.9
3/8" (10)	Yes	15	71	83	140	0.9
1/2" (15)	Yes	15	72	83	140	1
3/4" (20)	No	15	72	83	140	1
3/4" (20)	Yes	20	97	88	140	1.5
1" (25)	No	20	97	88	140	1.5
1" (25)	Yes	25	109	97	190	2
1.1/4" (32)	No	25	109	97	190	2
1.1/4" (32)	Yes	31.8	118	103	190	3
1.1/2" (40)	No	31.8	118	103	190	3
1.1/2" (40)	Yes	38	129	148	290	4.5
2" (50)	No	38	129	148	290	4.5
2" (50)	Yes	50	145	157	290	6.5
2.1/2" (65)	No	50	145	157	290	6.5

Pressure and temperature range							
Seat material + DN full bore	-29	50	100	150	200	250	[°C]
TF4103 & TFM1600 1/4" - 1"	102.1	100.2	68	34	0	-	[bar]
TF4215 1/4" - 1"	102.1	100.2	93.2	63	32	0	[bar]
TF4103 & TFM1600 1.1/4" - 1.1/2"	80	80	55	28	0	-	[bar]
TF4215 1.1/4" - 1.1/2"	80	80	80	55	28	0	[bar]
TF4103 & TFM1600 2"	76	76	53	27	0	-	[bar]
TF4215 2"	76	76	76	51	25	0	[bar]

Nominal Inner diameter	Standard thread connection	Pressure rating	Face to Face norm	Manual operation	Mounting flange	Mounting flange 2	Bore	With locking device	Maximum operating pressure bar	Article
1/4" (8)	ISO 228-1	Class 600	Manufacturer standard	Handle	F03	F04	Full bore	No	102	13708502
3/8" (10)	ISO 228-1	Class 600	Manufacturer standard	Handle	F03	F04	Full bore	No	102	13708513
1/2" (15)	ISO 228-1	Class 600	Manufacturer standard	Handle	F03	F04	Full bore	No	102	13559651
3/4" (20)	ISO 228-1	Class 600	Manufacturer standard	Handle	F03	F04	Reduced bore	No	102	14256491
3/4" (20)	ISO 228-1	Class 600	Manufacturer standard	Handle	F03	F04	Full bore	No	102	13559652
1" (25)	ISO 228-1	Class 600	Manufacturer standard	Handle	F03	F04	Reduced bore	No	102	14256493
1" (25)	ISO 228-1	Class 600	Manufacturer standard	Handle	F04	F05	Full bore	No	102	13559663
1.1/4" (32)	ISO 228-1	Class 600	Manufacturer standard	Handle	F04	F05	Reduced bore	No	102	14256494

PR15792780352436 68_EN_23.04.2024

ERIKS BV | Tel: +31 88 855 80 03 | E-mail: vk@eriks.nl

Nominal inner diameter	Standard thread connection	Pressure rating	Face to Face norm	Manual operation	Mounting flange	Mounting flange 2	Bore	With locking device	Maximum operating pressure bar	Article
1.1/4" (32)	ISO 228-1	Class 600	Manufacturer standard	Handle	F04	F05	Full bore	No	80	13559664
1.1/2" (40)	ISO 228-1	Class 600	Manufacturer standard	Handle	F04	F05	Reduced bore	No	80	14256495
1.1/2" (40)	ISO 228-1	Class 600	Manufacturer standard	Handle	F07		Full bore	No	80	13559665
2" (50)	ISO 228-1	Class 600	Manufacturer standard	Handle	F07		Reduced bore	No	80	14256496
2" (50)	ISO 228-1	Class 600	Manufacturer standard	Handle	F07		Full bore	No	76	13559666
2.1/2" (65)	ISO 228-1	Class 600	Manufacturer standard	Handle	F07		Reduced bore	No	76	14256497